Developing Marine Autonomous Solutions

Marine Autonomous and Robotics Systems Group
and the
Marine Robotics Innovation Centre

AIDAN THORN
MARINE ROBOTICS INNOVATION CENTRE MANAGER

National Marine Facilities

- Research Ships Management
- Programme Management
- Marine Autonomous & Robotic Systems (*MARS*)
- Logistics & Warehousing
- Scientific Engineering
- Science & Project Support
- NERC National Facility for Scientific Diving

The National Marine Equipment Pool

Operated by National Marine Facilities

Holds more than 10,000 instruments and systems

Is available for use by the whole of the UK marine science community

MARS Fleet & Personnel

Underwater Gliders

- Teledyne Webb Slocum (1000m) x 12
- Teledyne Webb Slocum (200m) x 10
- Kongsberg Seagliders x 9
- Uni. Washington DeepGlider x 1 + 1

AUVs

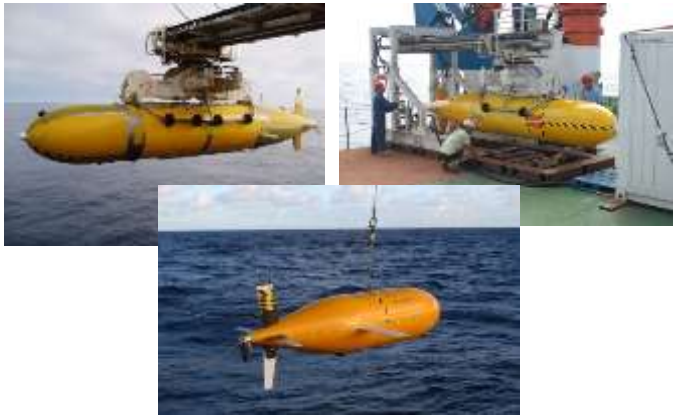

In-house developed:

- Autosub6000
- ALR6000 x 3
- *Autosub2KUI*
- *ALR1500 x 3*

ROV & Deep Tow Equipment

- Isis ROV
- HyBIS

USVs

STAFF

A mix of:

- Mechanical
- Electronics
- Software
- Systems

Marine Autonomous and Robotic Systems (MARS)

Marine Robotics Innovation Centre (MARSIC)

Demonstrator missions (e.g. MASSMO)

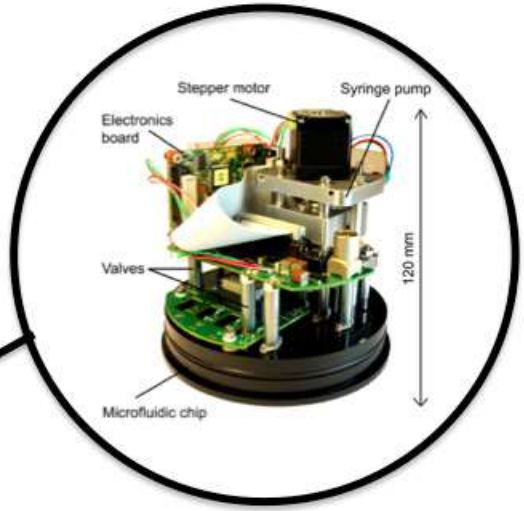

Micro-sensor development (OTE Group)

PhD and peer training (e.g. NEXUSS CDT)

BODC

British Oceanographic Data Centre

NMF Technology Roadmap

https://www.noc.ac.uk/files/documents/about/ispo/Marine_Facilities_Advisory_Board_March_2019_FINAL_2.pdf

Updated annually
Reviewed by the Marine Facilities Advisory Board (MFAB)

- Split into sections by capability eg.
  - Remotely operate platforms
  - High power MAS
  - Low power MAS
  - Etc.
- Each section split into
  - Current capabilities
  - Science drivers
  - Future capabilities - What we are working on
  - Aspirations – What we intend to work on

Attempts to capture science pull and technology push

NOC Innovation Centre

£3m centre for the emerging marine robotics sector

‘Eight Great Technologies’ initiative

Partners: ~30 organisations from SMEs to Large multinationals to Govt. bodies.

Over £15m in collaborative funded projects

Opened by Science Minister Jo Johnson, 23 November 2015

Marine Robotics Innovation Centre

1. A community of innovative companies developing technology for both platforms and components of Marine Autonomous Systems
2. This community co-exists with the NOC autonomy team who have extensive experience of deployment in challenging environments
3. Builds on existing NOC relationships to extend this community to future end-users in Defence, Energy & other emerging offshore sectors
4. Support the leveraging of supporting R&D funds from regional, national and international sources to assist developments towards end-user need

Marine Robotics Innovation Centre

Marine Robotics Innovatio

Coming Soon
Oil Spill Response Ltd.

Creating Impact from our Research

We actively engage with business to generate positive socio-economic impacts based upon our research outputs

Immediate impacts on your business may include:

- Development of new products or services
- That generate additional sales / exports
- And mean that you create new jobs

Secondary impacts may include:

- Lower carbon emissions from renewables
- Greater understanding of ocean processes leading to improved flood defence

It is key for us to report this back to UK Government and any new products created may reduce the cost of our ongoing research effort

Supporting business with SBRI

Small Business Research Initiative

Innovate UK and Defence Science & Technology Laboratory Partners

£2.7M funded projects:

2013-14 Long Endurance Marine Unmanned Surface Vehicle

2014-15 Autonomous Adaptive Ocean Sensing Networks

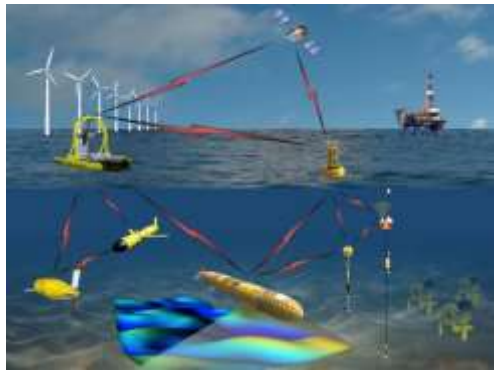

NERC SCIENCE OF THE ENVIRONMENT [dstl] SBRI Government challenges Ideas from business. Innovative solutions.

Innovate UK Projects – developing long term partnerships

- **Autonomous Surface / Sub-surface Survey System**
  - **Partners:** ASV (lead), Sonardyne, Seebyte, NOC
  - Development of an integrated system using USVs, AUVs and novel communications technology for conducting low cost shore based full water column marine surveys and monitoring operations for offshore energy applications, deep sea mining prospecting and Carbon Capture and Storage monitoring.

Innovate UK Projects – developing long term partnerships

- **Launch & Recovery of Multiple AUVs from an USV**
  - **Partners:** Planet Ocean (Lead), ASV, UoS, NOC
  - Development low-cost AUV and launch & recovery system from an USV for applications including defence, oil spill monitoring and science. Deployment of microAUVs from an USV will provide science users increased range, spatial sampling resolution and reduced cost versus some existing ship time solutions.

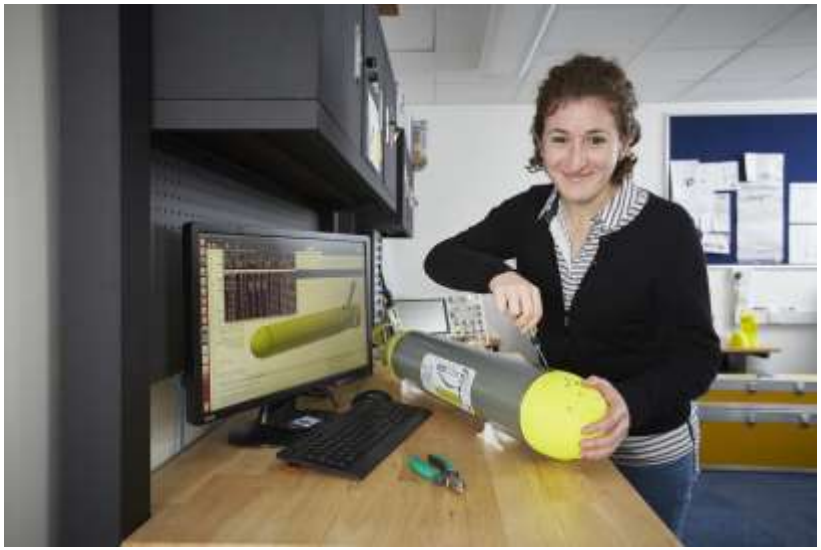

Innovate UK Projects – developing long term partnerships

- **Low Cost AUV Technology: Smart Networks and AI based navigation**
  - **Partners:** Planet Ocean (Lead), Newcastle University, NOC

  - Address the BP-defined use case (a multi-vehicle water column survey) by:
    - Integrating the Newcastle Uni small form-factor modem;
    - Introducing vehicle-to-vehicle communications;
    - Completely redesigning the navigation system;
    - Building a “smart network” capability;
    - Demonstrating a fleet of mutliple vehicles collaborating on an open water mission

SEA TECHNOLOGY
ecoSUB robotics
www.ecosub.uk
Advanced, small, low cost AUV technology
Planet Ocean Ltd

Innovate UK Projects – developing long term partnerships

- **Autonomous Aquatic Inspection and Intervention Robot(s)**
  - **Partners:** ROVCO(lead), University of Manchester, Forth, Thales, DRISQ, NOC
  - Develop two demonstrators of fully autonomous underwater vehicles, one to meet the requirements of off-shore coring and one to operate in wet nuclear storage pond inspections and interactions. Key features of the demonstrators that are being developed will be the use of enhanced autonomy and perception, hover capability, and the application of software verification tools to ensure robust and safe operation.

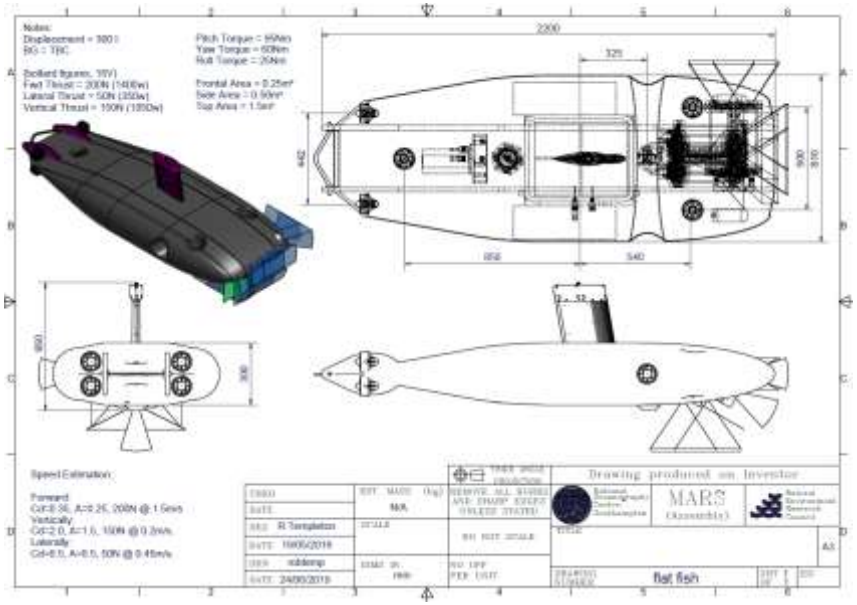

MARINE AUTONOMY & TECHNOLOGY SHOWCASE

12-14 NOVEMBER 2019

National Oceanography Centre

conference.noc.ac.uk/matshowcase

MATS 2019

AIDAN THORN
MARINE ROBOTICS INNOVATION CENTRE MANAGER
AIDAN.THORN@NOC.AC.UK
+44 (0) 7590 417 716